REV	ECN	DESCRIPTION	DATE
R	26032	SEE SHEET 3 OF 4	10/1/02
T	26090	SEE SHEET 4 OF 4	10/21/02
U	26124	SEE SHEET 3 OF 4	11/1/02
W	27392	SEE SHEET 3 OF 4	3/22/04
Y	35923	SEE SHEET 3 OF 4	3/19/08

REV	ECN	DESCRIPTION	DATE
C	4483	REV & REDRAWN	4/6/89
D	4957	CHANGED P/N'S	10/10/89
E	14332	CHANGED P/N'S	4/30/96
F	16334	CHG TO MS HARDWARE	3/12/97
G	20496	SEE SHT 2 OF 2	7/15/98
H	24819	ADDED SHEET 3 & 4 OF 4	9/13/01
J	24996	SEE SHT 3 OF 4	11/1/01
K	25220	SEE SHT 4 OF 4	1/22/02
L	25361	SEE SHT 3 OF 4	2/25/02
M	25385	SEE SHTS 3 & 4	2/28/02
N	25595	SEE SHEET 3 OF 4	5/14/02
P	25861	SEE SHEET 3 OF 4	7/11/02

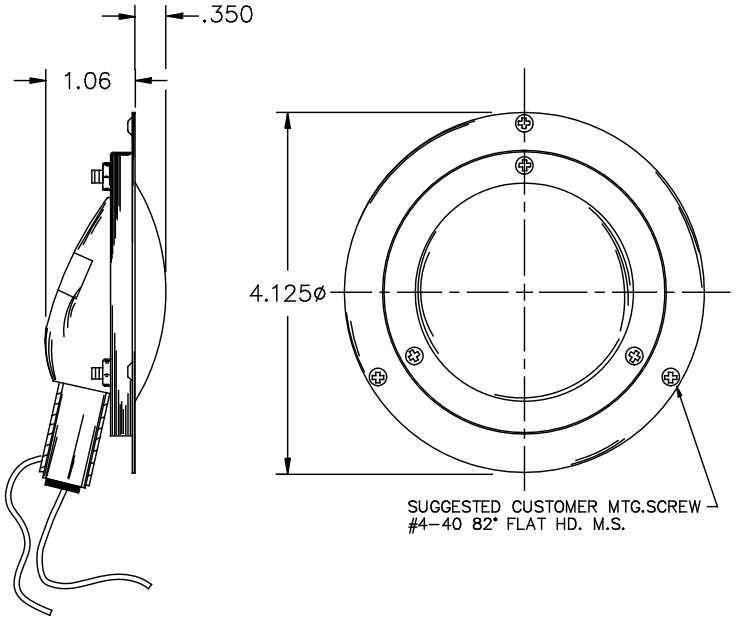

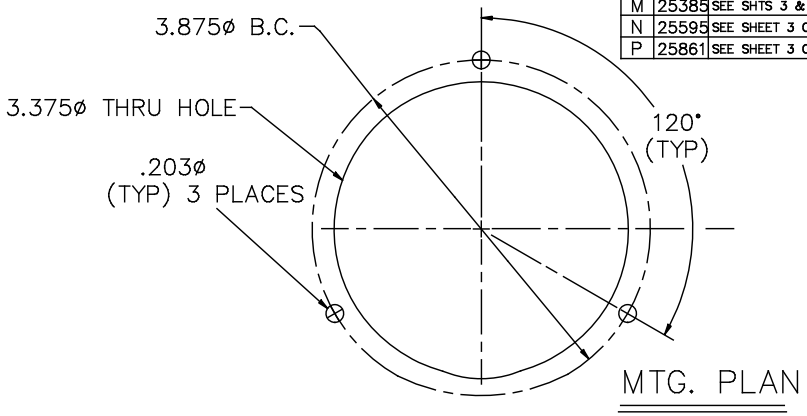

MTG. PLAN

NOTES:

1) ALL WIRE TEFLON COATED 105°C.

2) FINISH-BEZEL & REFLECTOR PAINTED OFF WHITE BAKING, PAINT #M-7991 (OR EQUIVALENT)

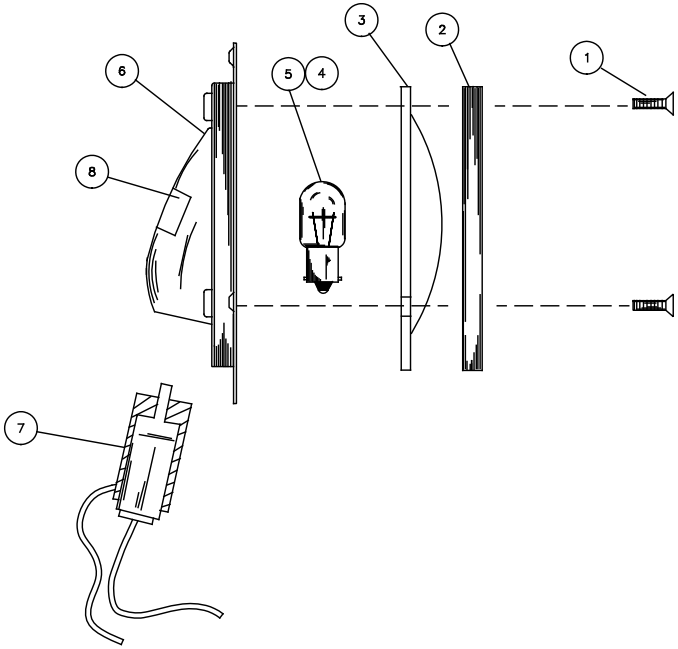

QTY.		ITEM	PART NUMBER	DESCRIPTION
1	1	8	10-0330375-00	LABEL, MODEL #
1	1	7	33-05110301-0	LAMP SOCKET
1	1	6	11-470150-100	REFLECTOR HOUSING(OFF WHITE)
1	–	5	34-0428020-55	LAMP 28V (GE# 1495)
–	1	4	34-0414020-54	LAMP 14V (GE# 1414)
1	1	3	68-7170340-00	LENS
1	1	2	19-170342-012	LENS BEZEL(OFF WHITE)
3	3	1	14-0050509-17	#4-40 X 1/2 PHILLIPS FHMS (MS51959-17)
•			01-0770339-02	FLOODLIGHT ASSY(28VOLT)
	•		01-0770339-01	FLOODLIGHT ASSY(14VOLT)

THIS DRAWING IS PROPRIETARY TO THE WHELEN ENG. CO. INC., ANY REPRODUCTION, DISCLOSURE OR USE OF THIS DRAWING WITHOUT WRITTEN AUTHORIZATION FROM WHELEN ENG. CO. INC. IS PROHIBITED

WHELEN® ENGINEERING COMPANY INC.
ROUTE 145
CHESTER, CT 06412-0684
TELEPHONE (860)528-9504

MATERIAL

FINISH

FLOODLIGHT ASSEMBLY

TOLERANCE: UNLESS OTHERWISE SPECIFIED
ANGLES ±1/2°
.XX=±.02
.XXX=±.010

DR. JPA
CH. GPS
ENG. JPA
APP. VDC

SCALE	DATE	RELEASE DATE
NONE	4/6/89	4/6/89

DWG NO.	REV	ISSUE	SHEET	OF
70339	Y	1	1	4

© 1989 WHELEN ENG. CO. INC. CAGE CODE 10402